版本	标识	修改内容	修改日期	签名

Front view

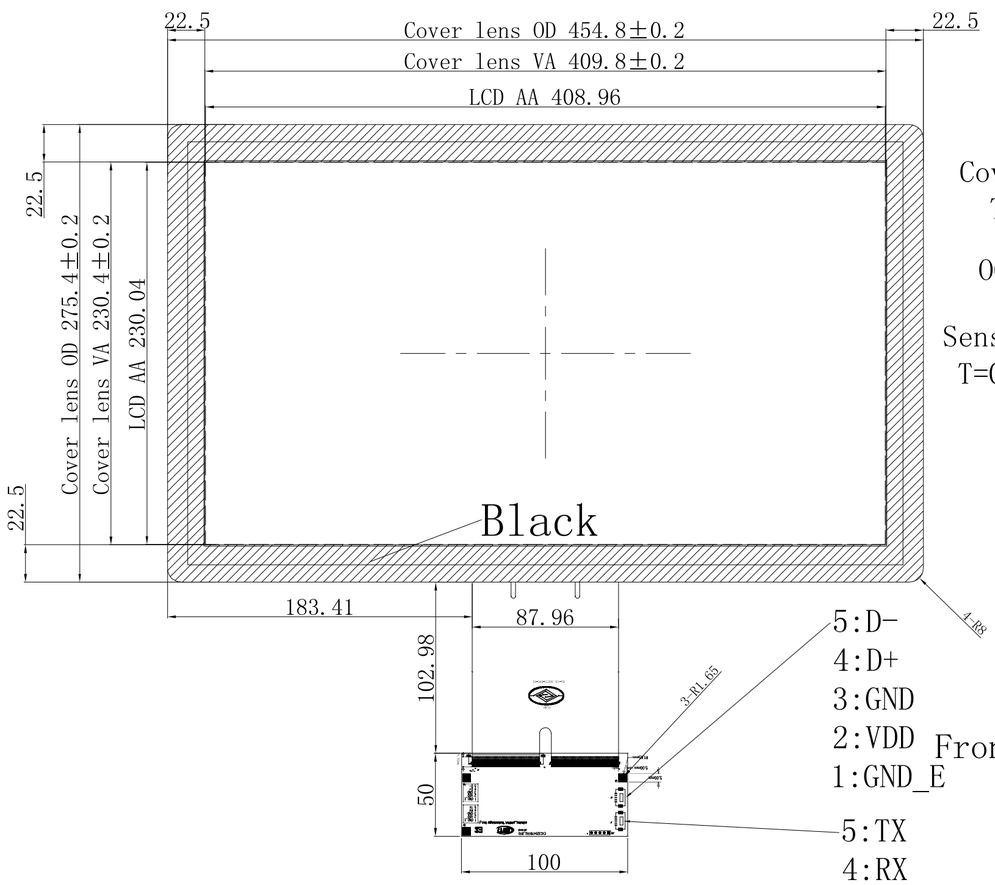

Side view

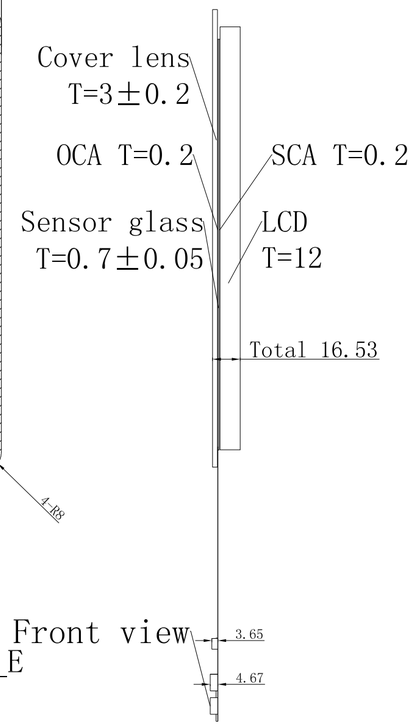

Back view

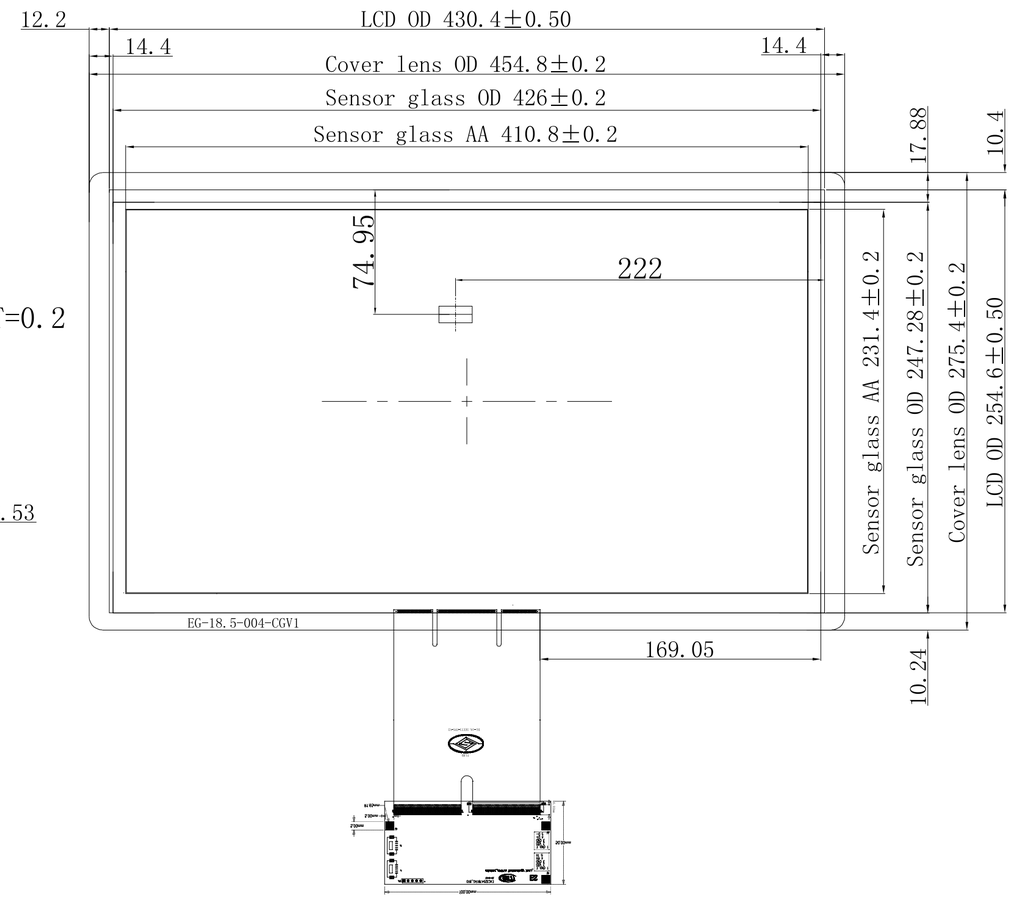

Front view

5:D-
4:D+
3:GND
2:VDD
1:GND_E

5:TX
4:RX
3:GND
2:VDD
1:GND_E

Technical Parameters
0:Interface :USB
1; Touch point: 10 (win7 and win8)
2: Cover lens + Sensor glass + OCA+FPC
3: Cover lens Thickness = 3mm
4: Sensor glass Thickness = 0.7mm
5: OCA Thickness = 0.2mm
6: Total Thickness = 3.9mm
7: Sensor Process: Print Process (ITO Pattern) +Laser Ag(Metal line)
8: Input Voltage 3.5V∽5.5V.Typical 5V
9:Transmittance:>85%
10: Surface Hardness:>6H
11: Relative Humidity:95% at 60℃, RH Non-condensing
12: Dimension tolerance:±0.2mm

JFCVISION		JFC INDUSTRIAL CO.,LTD				
Draw	Cindy.deng	2018.07.18	Materials	Glass	EG-18.5-004-V1 G185HAN01.0	
Check			Scale	1:1		
Approv	sim		Units	mm	Name	18.5 CTP+LCD
		Page1/1			No.	JFC185CFYS.V0